ACCESS PIT AREA TO DRAIN CONNECTION.
CUSTOMER TO PROVIDE COVER OVER PIT AREA.

NOTES:
1 - SEE DRAWING NUMBER KS88N-37S FOR PIT DETAIL.
2 - UNIT CAN BE SHIPPED KNOCKED DOWN FOR FIELD INSTALLATION OR SHIPPED FULLY ASSEMBLED. IF THE MACHINE IS SHIPPED FULLY ASSEMBLED, IT IS THE CUSTOMERS RESPONSIBILITY TO ENSURE THAT THE WASHER WILL PASS THROUGH ALL DOOR OPENINGS.
3 - THIS DRAWING IS A PROPOSAL DRAWING ONLY. A FORMAL APPROVAL DRAWING WILL BE ISSUED WHEN A PURCHASE ORDER IS RECIEVED BY ALVEY WASHING EQUIPMENT.

PLAN VIEW

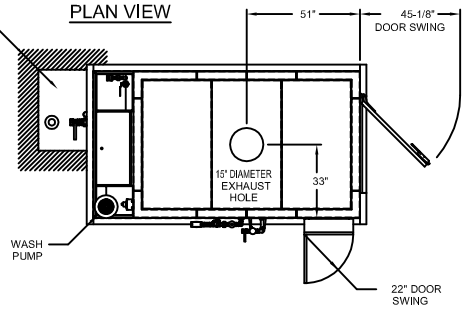

NOTES:

1 - MANUFACTURER RESERVES THE RIGHT OF MODIFICATIONS WITHOUT PRIOR NOTICE.
2 - TO MAINTAIN PROPER HEATING REQUIREMENTS WHEN USING A FAN PROVIDED BY OTHERS, THE FAN CIRCUIT NEEDS TO BE DESIGNED NOT TO OPERATE DURING THE NORMAL MACHINE CYCLE. THE FAN SHOULD ONLY ACTIVATE WHEN THE DOOR IS OPENED.

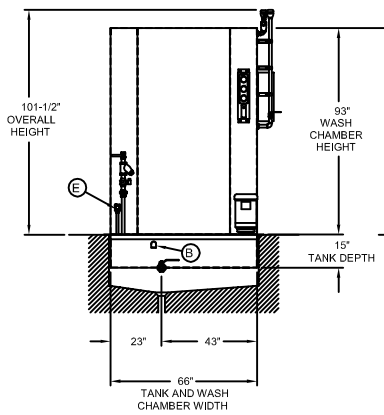

END VIEW

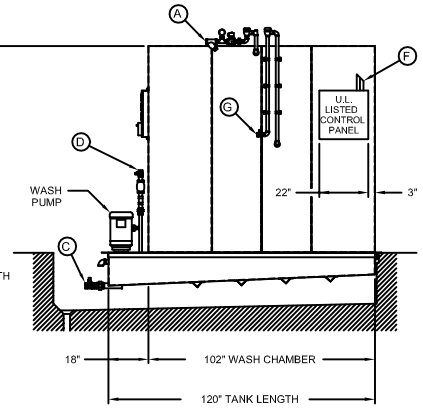

SIDE ELEVATION

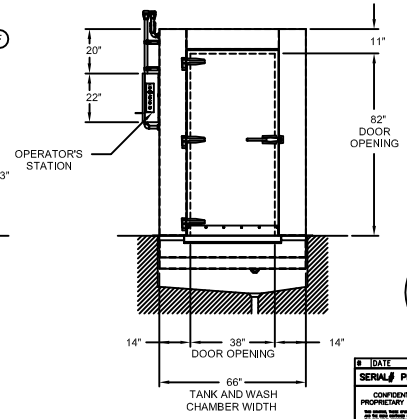

LOAD END VIEW

KS-88

STEAM COIL HEATED TANK

#	DATE	RELEASE & REVISION DESCRIPTION	NAME
SERIAL# PROPOSAL			WORK ORDER:

CONFIDENTIAL PROPRIETARY NOTICE

ARMOR METAL GROUP
www.armormetalgroup.com

ALVEY WASHING EQUIPMENT
AN ARMOR METAL GROUP COMPANY CINCINNATI, OHIO

TITLE KS-88
FOR PROPOSAL DRAWING
DATE
SCALE NTS
DWN. BY MRM
DWG. NO. KS-88
2ND ARM. CHK. BY

PLOT STAMP: 10/9/2008 2:57 PM